SOLARTECH

European Solar Energy Storage

Three-level architecture of large energy storage

Overview

In the lithium battery energy storage system, the BMS usually adopts a three-level architecture (slave BMU, master BCU, and master BAU) to achieve hierarchical management and control from battery socket box (Pack) to Rack (Stack).Do energy storage systems perform well with a suboptimal architecture?

It is possible for an energy storage system with a good storage technology to perform poorly when implemented with a suboptimal architecture, while other energy storage systems with mediocre storage technologies can perform well when implemented with superior architectures.

What makes a successful energy storage system?

A successful implementation depends on how well the energy storage system is architected and assembled. The system's architecture can determine its performance and reliability, in concert with or even despite the technology it employs.

What is a middle-level energy storage model?

The middle-level of the model primarily determines the capacity and power of the energy storage devices, aiming to maximize the annual profit of energy storage investments while assessing whether the proposed energy storage planning scheme can enhance the overall resilience of the power grid.

What is energy storage capacity & power allocation?

By optimizing energy storage capacity and power allocation, the goal is to maximize the returns on energy storage investments and ensure that the deployment of the energy storage system can improve the reliability and resilience of the power grid.

Why is node 1 not considered in energy storage configuration decisions?

Node 1 serves as a balancing node crucial for maintaining voltage and power

equilibrium across the entire system; hence it is not considered in energy storage configuration decisions. Consequently, nodes 5 and 13 are initially selected as potential sites for energy storage. 4.3.

Three-level architecture of large energy storage

Brief analysis of the typical three-level architecture of BMS for

In energy storage power stations, BMS usually adopts a three-level architecture (slave control, master control, and master control) to achieve hierarchical management and control from

Optimal sizing and siting of energy storage systems based on ...

The proposed three-level optimization framework for BESS sizing and siting, as illustrated in Fig. 1, consists of an upper-level pre-optimization layer, a middle-level capacity configuration layer, and a lower-level operational optimization layer.

??????????

In the lithium battery energy storage system, the BMS usually adopts a three-level architecture (slave BMU, master BCU, and master BAU) to achieve hierarchical management and control from battery socket box (Pack) to Rack (Stack).

Energy Storage Architecture

It is possible for an energy storage system with a good storage technology to perform poorly when

implemented with a suboptimal architecture, while other energy storage systems with mediocre storage technologies can perform ...

CN117725017A

The invention aims to provide a three-level architecture system and a three-level architecture method for energy storage, and aims to solve the technical problem of high failure

??????????????????

In the lithium battery energy storage system, the BMS usually adopts a three-level architecture (slave BMU, master BCU, and master BAU) to achieve hierarchical management and control from battery socket box (Pack) to Rack (Stack).

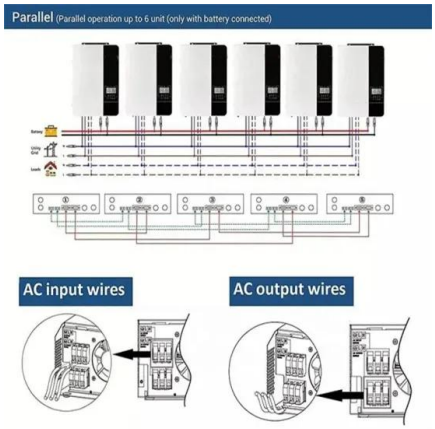

Energy Storage Architecture

It is possible for an energy storage system with a good storage technology to perform poorly when implemented with a suboptimal architecture, while other energy storage systems with mediocre storage technologies can ...

BMS Architecture for Energy Storage

A modern energy storage BMS adopts a modular three-tier architecture, which enables efficient scalability and fault isolation: BMU (Battery Monitoring Unit): Installed at the battery module level to monitor voltage, current, and temperature.

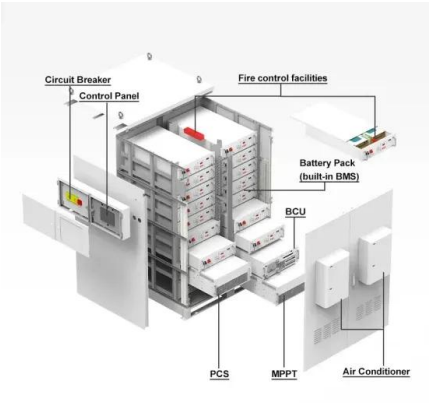

Three-level architecture of large energy storage

In energy storage power stations, BMS usually adopts a three-level architecture (slave control, master control, and master control) to achieve hierarchical management and

Typical three-level architecture of energy storage power station BMS

?In energy storage power stations, BMS usually adopts a three-level architecture to achieve hierarchical management and control from battery module (Pack) - Cluster - Stack.

WHAT IS ENERGY STORAGE SYSTEM ARCHITECTURE

What are the three energy storage technologies? This paper addresses three energy storage technologies: PH, compressed air storage (CAES) and hydrogen storage (Figure 1). These technologies are among the most important grid-scale ...

Brief analysis of the typical three-level architecture of ...

In energy storage power stations, BMS usually adopts a three-level architecture (slave control, master control, and master control) to achieve hierarchical management and control from

Contact Us

For catalog requests, pricing, or partnerships, please visit: https://bialydom.kolobrzeg.pl